TOP | VISION
INSTORE

ALUMINA

Remote controlled - rotating mounting set
Ferngesteuert - drehbares Montageset
Mando a distancia - set de montaje giratorio
á télécommande - set de fixation rotatives
op afstand bedienbaar - montageset draaibaar

User manual

Produkthandbuch
Manual del producto
Manuel du produit
Product handleiding

Top Vision Group Tel: +31 23 5176 677 info@topvisiongroup.com

PACKAGING CONTENT / VERPACKUNGSINHALT / CONTENIDO DEL EMBALAJE / CONTENU DE COLIS / VERPAKKINGSINHOUD

50681-R (15REM)
50682-R (18REM)

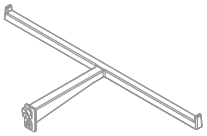

16003
(15/18x)

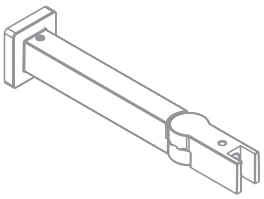

42550
(3x)

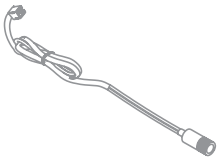

16126
1500mm
(1x)

16905
M4x4
(4x)

16186
M4x20
(1x)

95150
M4
(2x)

95624
M4
(2x)

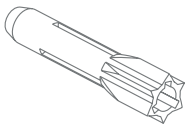

95092
S6x39
(2x)

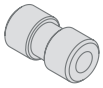

16182
Ø7,2x16
(2x)

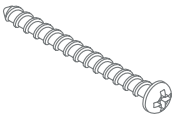

95132
3.5x50
(2x)

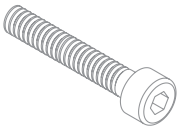

95052
M4x45
(2x)

16234
21x21x1,5mm
(2x)

REQUIRED TOOLS / BENÖTIGTEN WERKZEUGE / HERRAMIENTAS NECESARIAS / OUTILS NÉCESSAIRES / BENODIGDE GEREEDSCHAPPEN

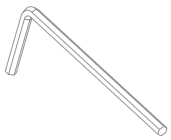

92041 #2
94060 #2.5
94034 #3

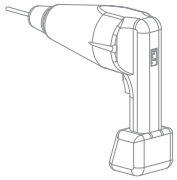

6mm (stone)
4,5mm (plexi)
2mm (wood)

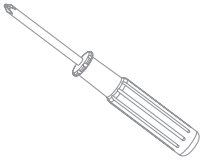

P2

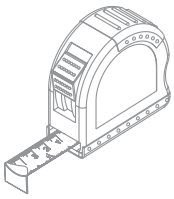

1

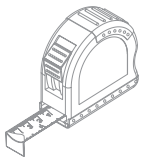

A
7 positions: 554 mm
8 positions: 631 mm
9 positions: 708 mm
10 positions: 785 mm
11 positions: 862 mm
12 positions: 939 mm
13 positions: 1016 mm
14 positions: 1093 mm
15 positions: 1170 mm
16 positions: 1247 mm
17 positions: 1324 mm
18 positions: 1380 mm

B* 190mm

C** 1900mm

D**
16 positions: 650 mm
17 positions: 727 mm
18 positions: 706 mm

* - Advised distance
- Vorgeschagener Abstand
- Distancia aconsejable
- Distance recommandée
- Geadviseerde afstand

** - 3rd wall bracket
- Dritte Wandhalterung
- Soporte de pared tercera
- 3 support mural
- 3e muurbeugel

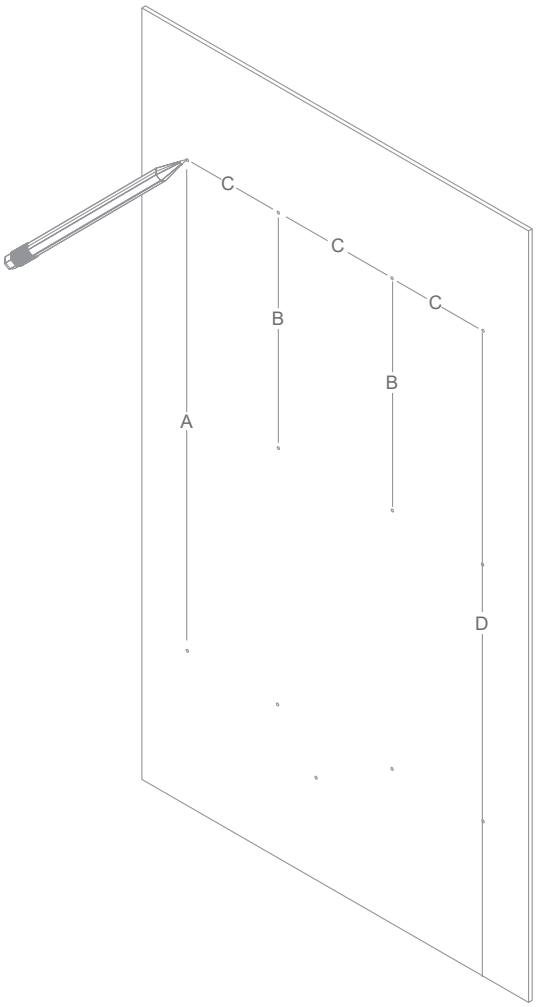

2

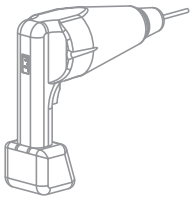

A Ø2 mm
- for assembly on a wooden panel
- für die Montage auf einer Holzplatte
- para el montaje en un panel de madera
- pour le montage sur un panneau en bois
- voor assemblage op een houten paneel

Ø4,5 mm
- for assembly on a Plexi panel
- für die Montage auf einer Plexiglasplatte
- para el montaje en un panel de plexiglás
- pour le montage sur un panneau en plexi
- voor assemblage op een plexi paneel

B Ø4,5 mm

C Ø8 mm

D Ø11,5 mm
- When using receiver unit
- Bei der Verwendung von Empfängereinheit
- Cuando se utiliza la unidad receptora
- Lorsque vous utilisez l'unité de réception
- Bij gebruik van de ontvangstunit

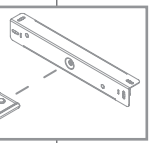

Ø16 mm
- When using external receiver eye
- Bei der Verwendung von externen Empfänger Augen
- Cuando se utiliza el ojo receptor externo
- Lors de l'utilisation d'œil récepteur externe
- Bij gebruik van een extern ontvangst-oog

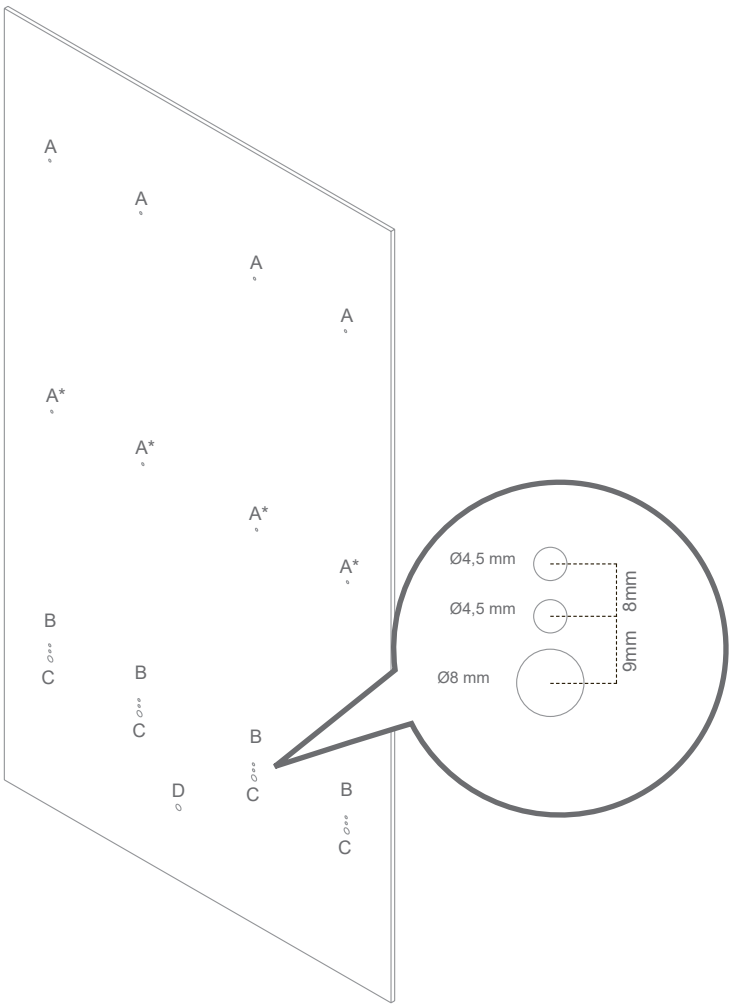

3 A

- for assembly on a wooden panel
- für die Montage auf einer Holzplatte
- para el montaje en un panel de madera
- pour le montage sur un panneau en bois
- voor assemblage op een houten paneel

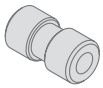

16182
Ø7,2x16
(2x)

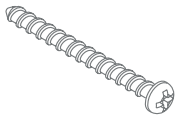

95132
3.5x50
(2x)

16186
M4x20
(2x)

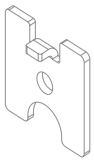

16234
21x21x1,5mm
(2x)

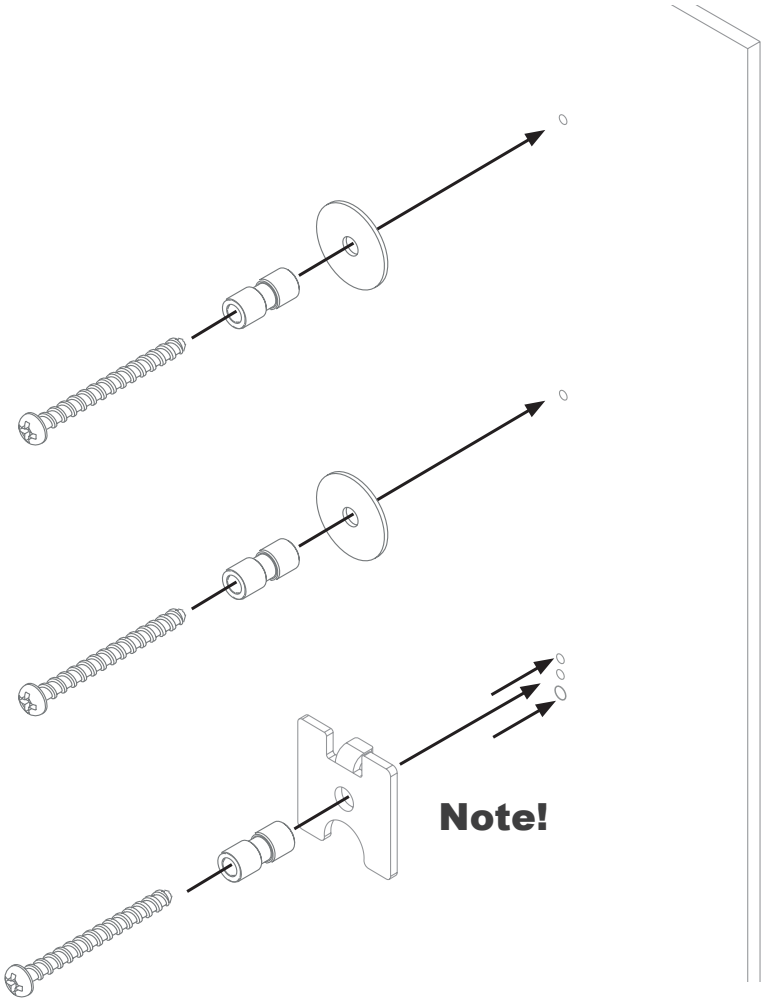

3 B

- for assembly on a Plexi panel
- für die Montage auf einer Plexiglasplatte
- para el montaje en un panel de plexiglás
- pour le montage sur un panneau en plexi
- voor assemblage op een plexi paneel

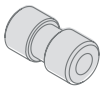

16182
Ø7,2x16
(2x)

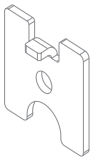

16234
21x21x1,5mm
(2x)

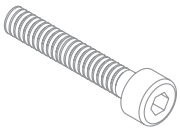

95052
M4x45
(2x)

16186
M4x20
(2x)

95624
M4
(2x)

95150
M4
(2x)

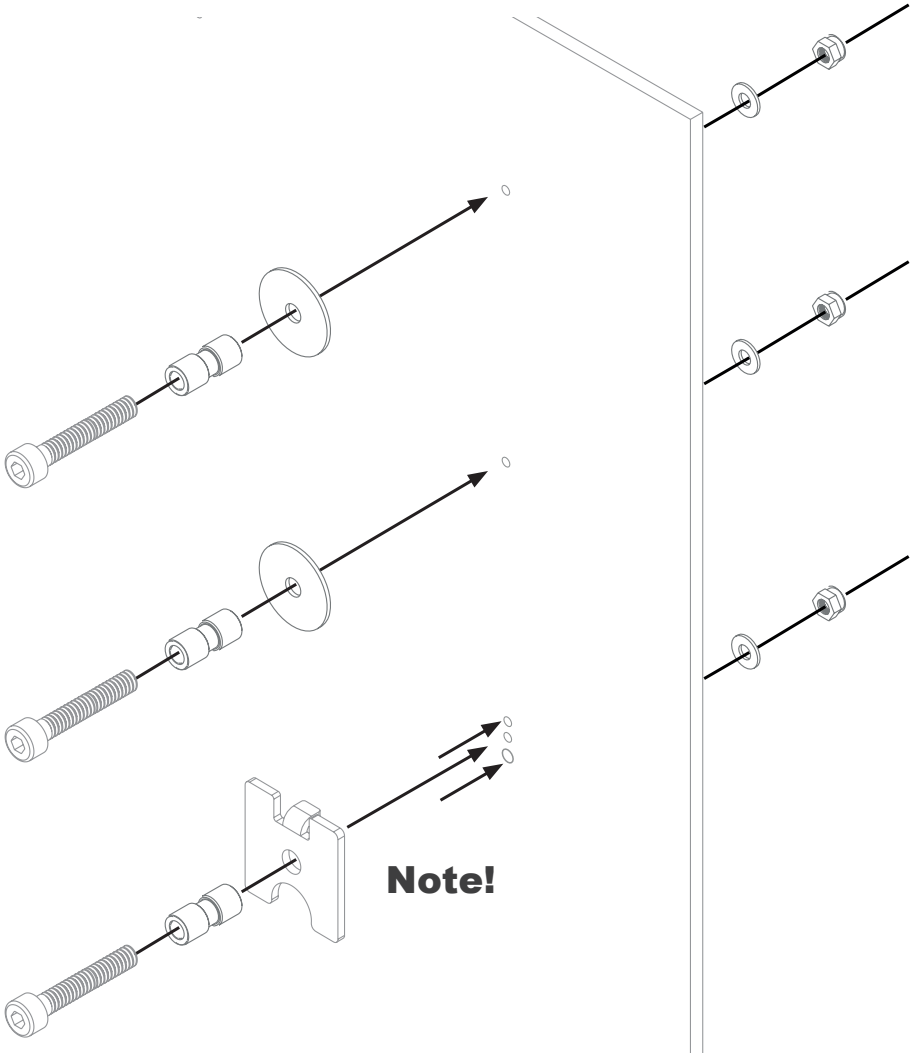

4

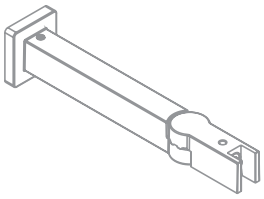

42550
(3x)

50681-R (15REM)
50682-R (18REM)

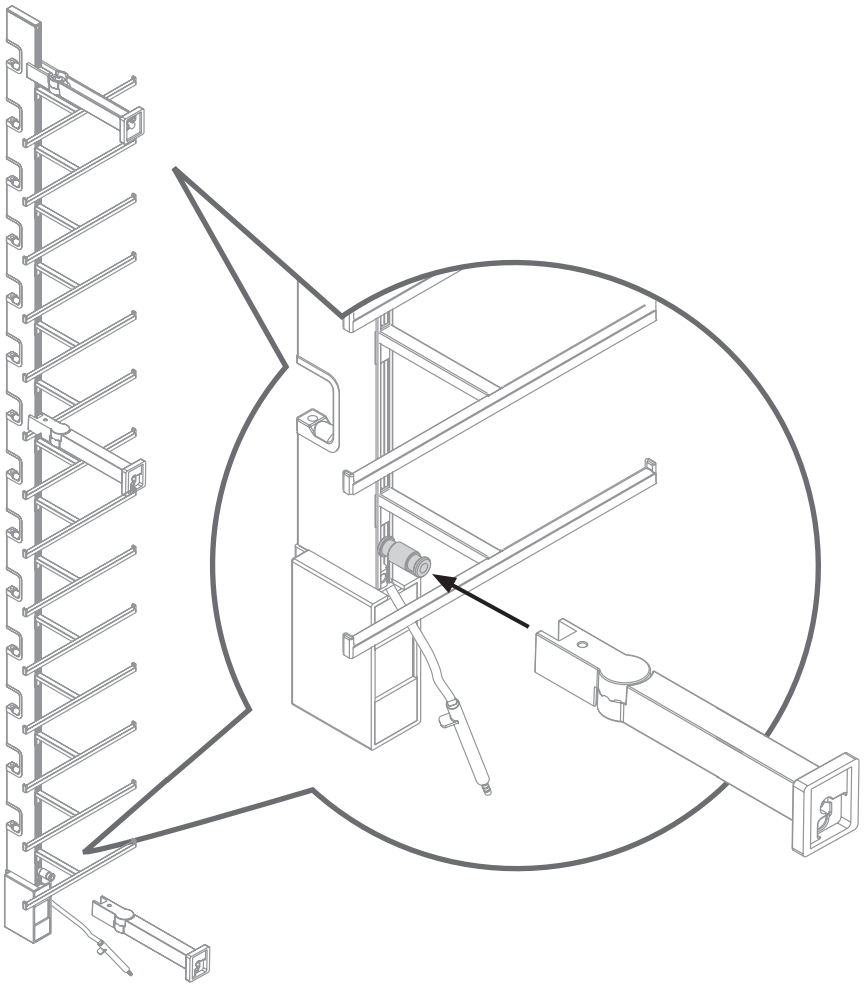

5

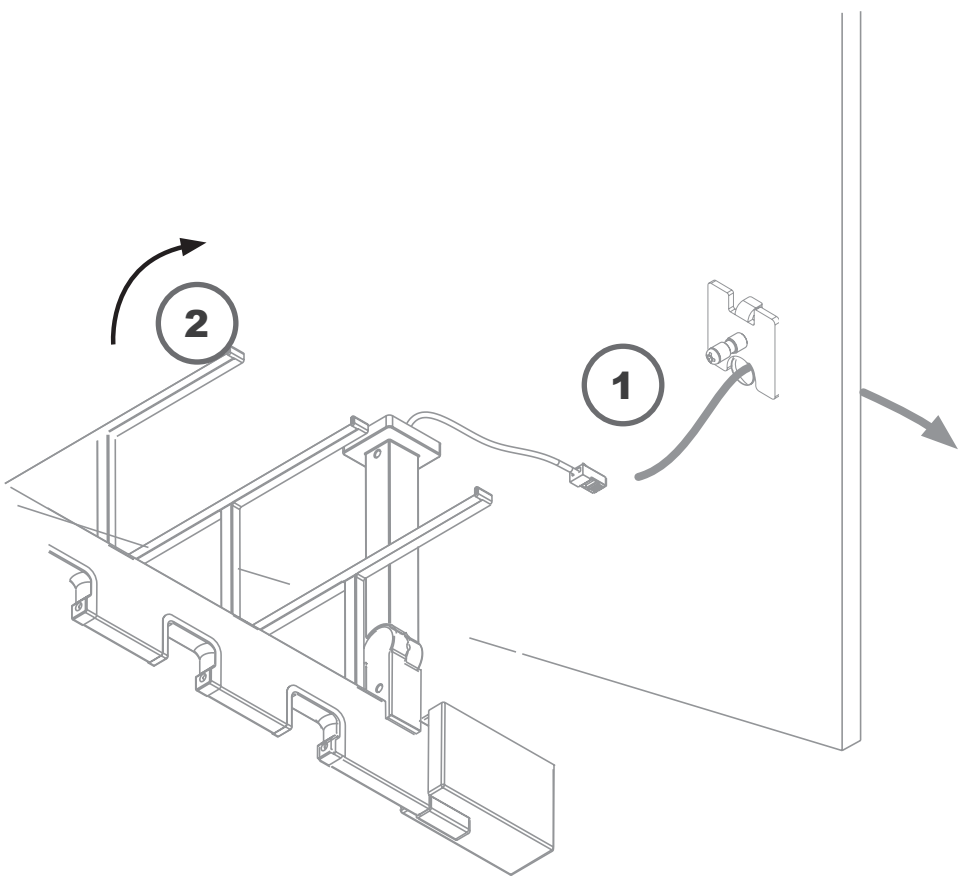

6

????? (15REM)
???? (18REM)

16905 (1x)
M4x4

92041 (1x)
#2

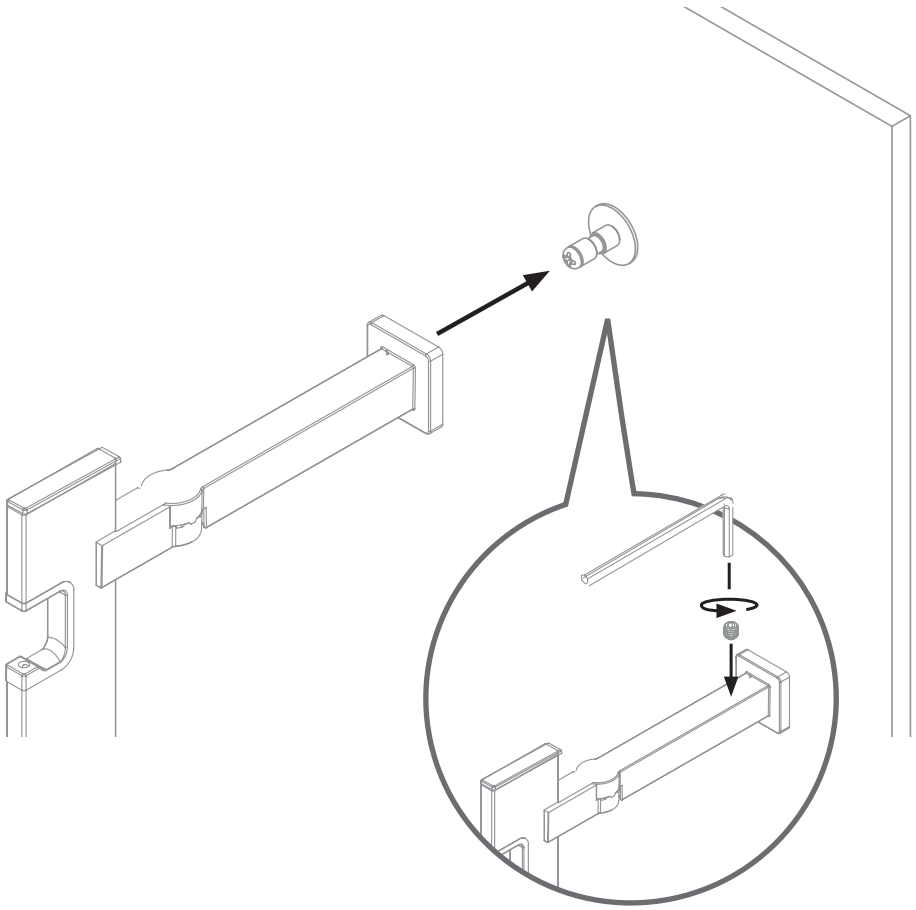

7

16905 (1x)
M4x4

92041 (1x)
#2

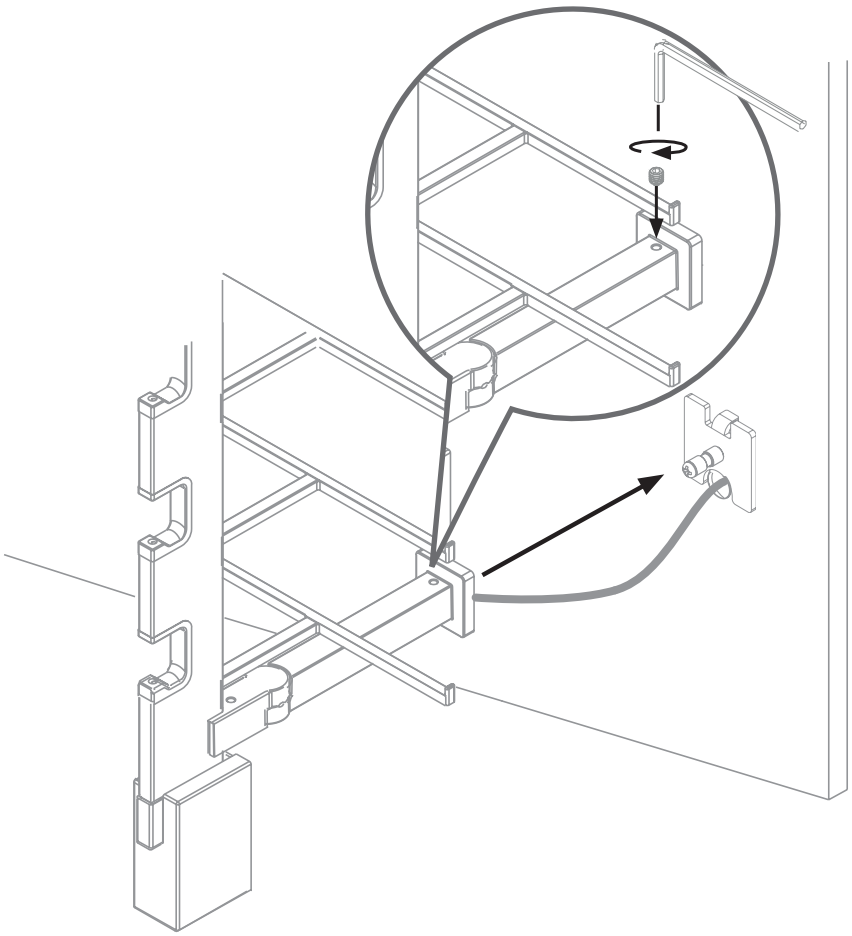

8a

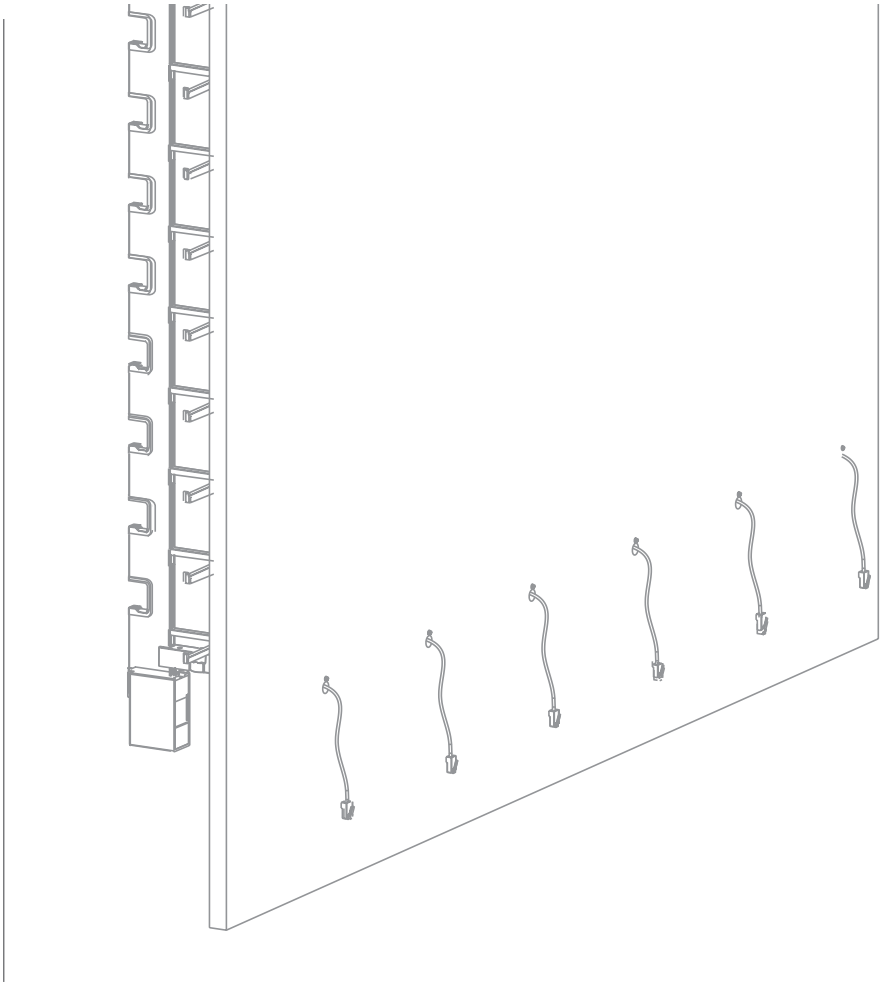

POSITIONING OF THE RECEIVER UNIT

Even before deciding where you will mount your receiver eye, please keep the following lengths of the various cables in mind.

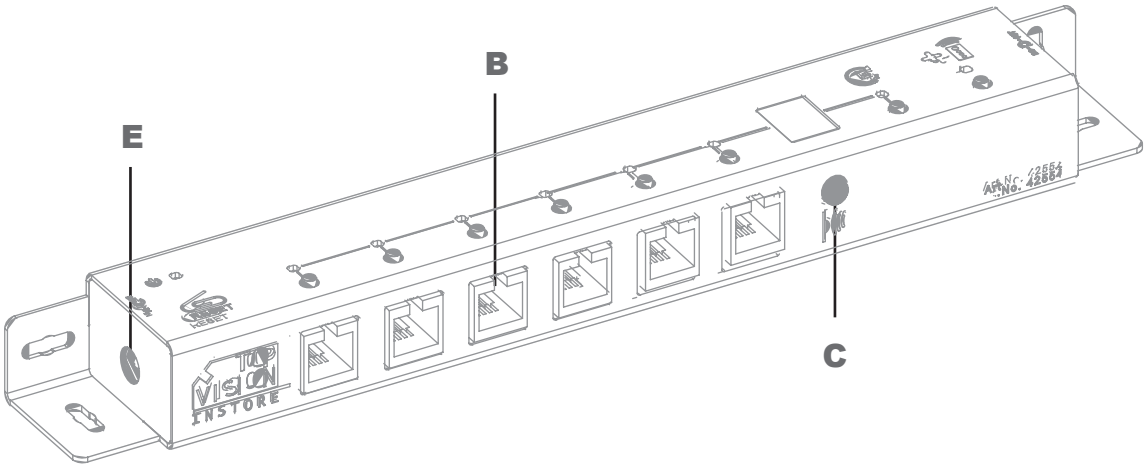

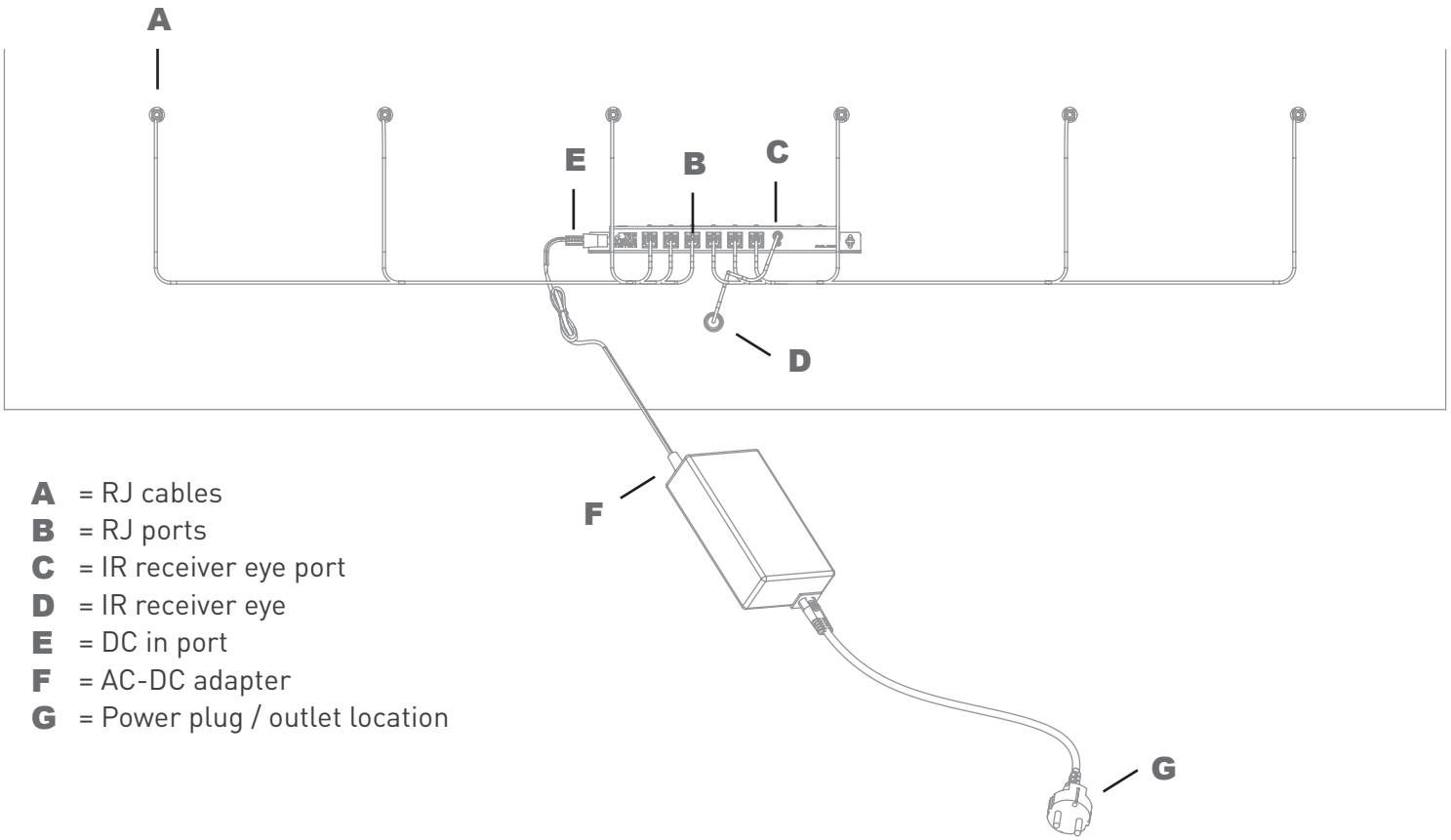

A = RJ cables
B = RJ ports
C = IR receiver eye port
D = IR receiver eye
E = DC in port
F = AC-DC adapter
G = Power plug / outlet location

A TO B

Please note that the distance from **A** (RJ cables of the eyewear display columns) to **B** (RJ ports) does not exceed 125cm.

C TO D

Please note that the distance from **C** (IR receiver eye port) to **D** (IR receiver eye) does not exceed 125cm.

E TO F

Please note that the distance from **E** (DC in port) to **F** (AC-DC adapter) does not exceed 170cm.

E TO G

Please note that the distance from **E** (DC port) to **G** (power outlet) does not exceed 350cm.

MOUNTING ON A BACK OF A PANEL

Option 1

HORIZONTAL - STRAIGHT

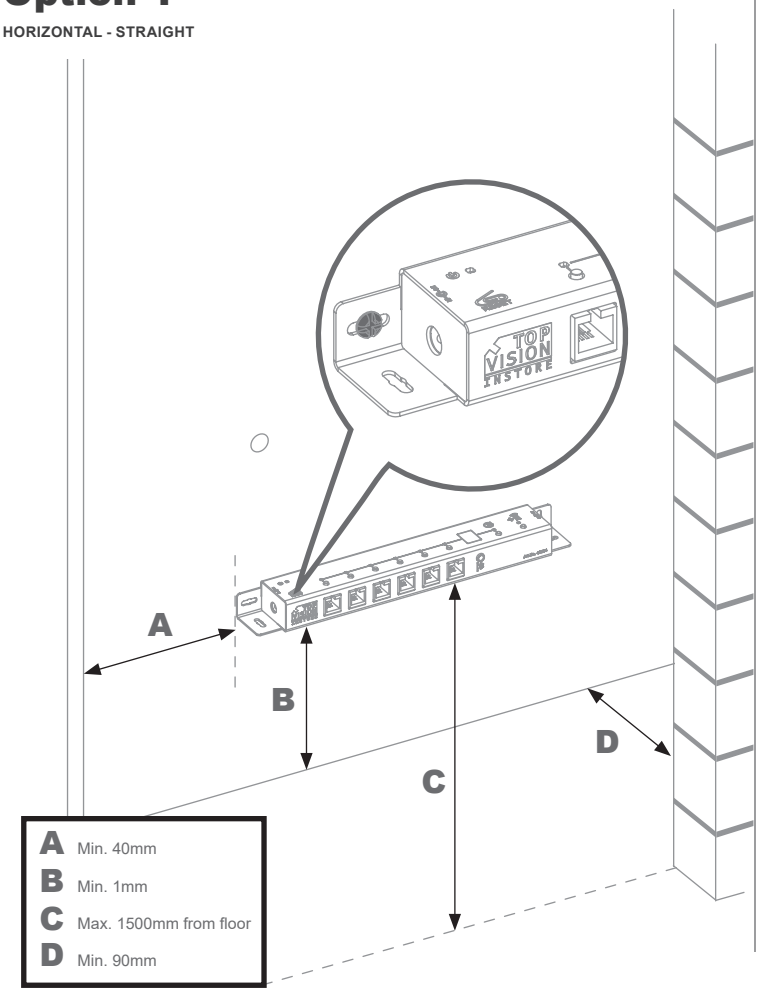

Option 2

HORIZONTAL - FLAT

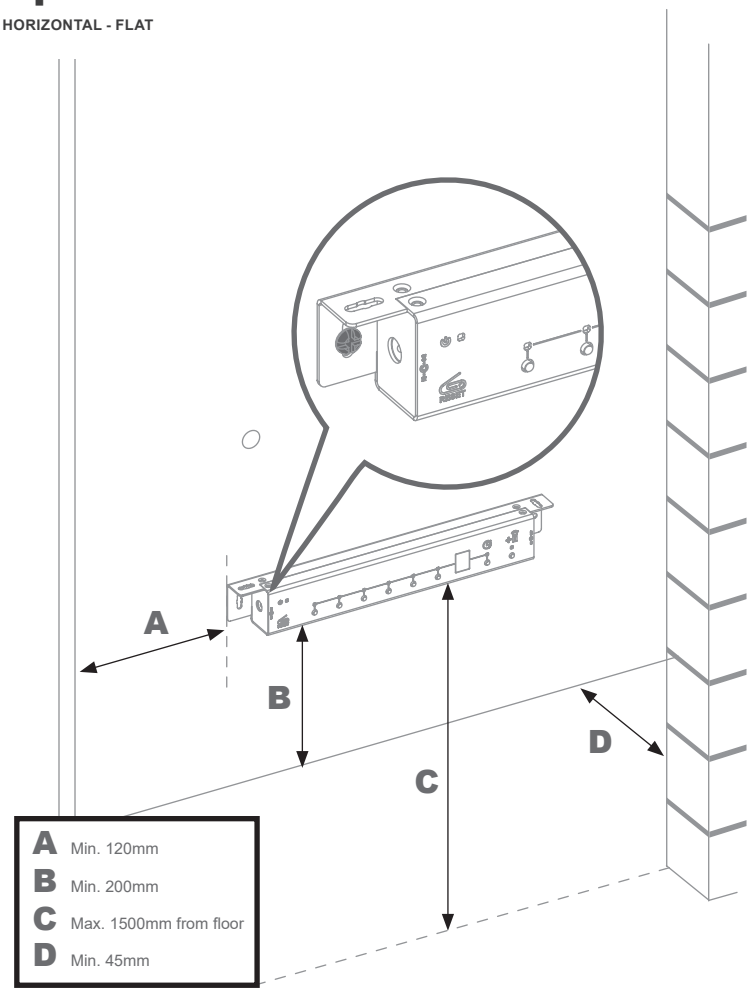

Option 3

VERTICAL - STRAIGHT

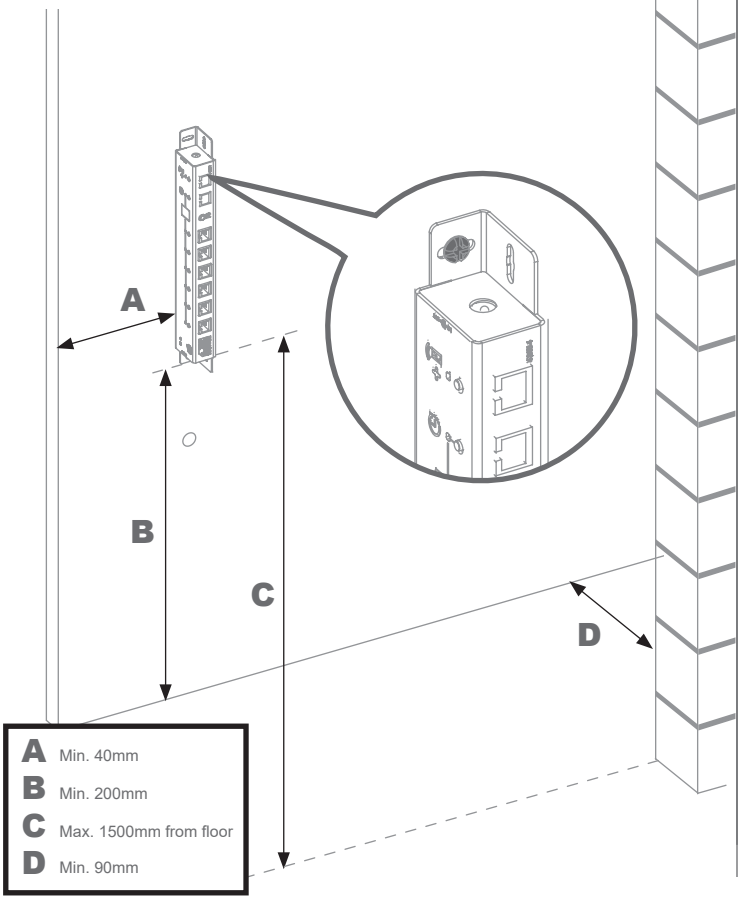

Option 4

VERTICAL - FLAT

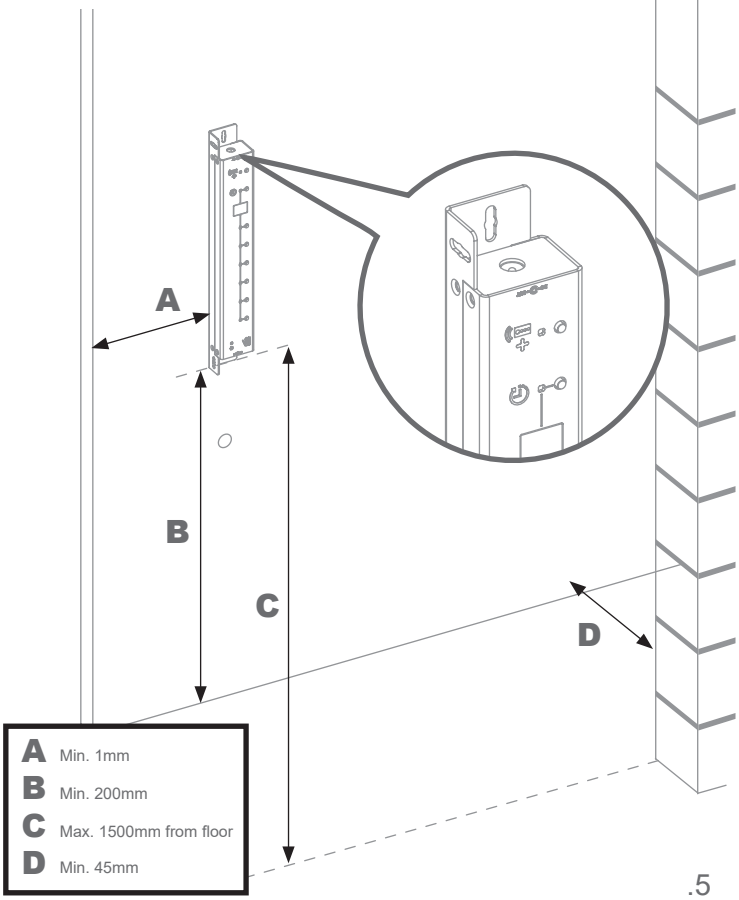

MOUNTING ON THE BACK WALL

Option 1

HORIZONTAL - STRAIGHT

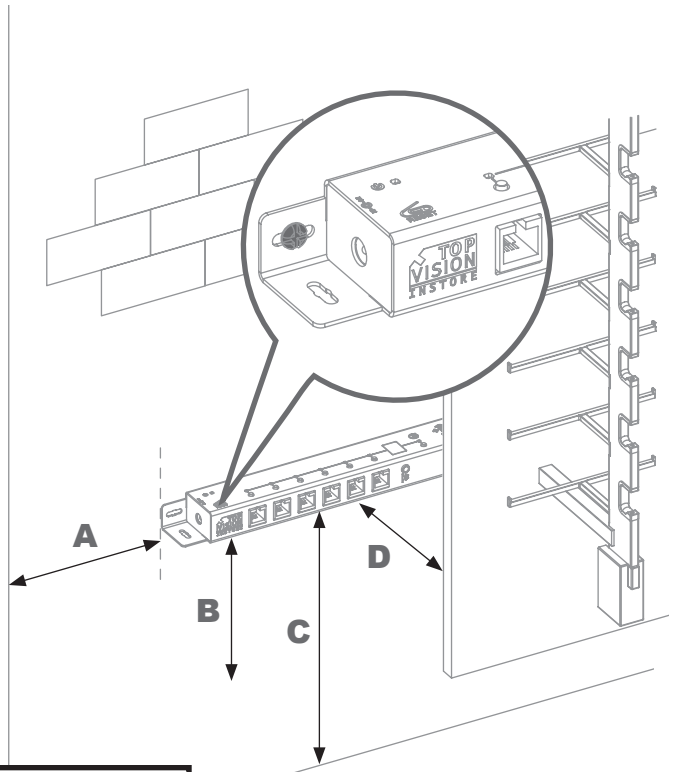

A Min. 40mm
B Min. 1mm
C Max. 1500mm from floor
D Min. 90mm

Option 2

HORIZONTAL - FLAT

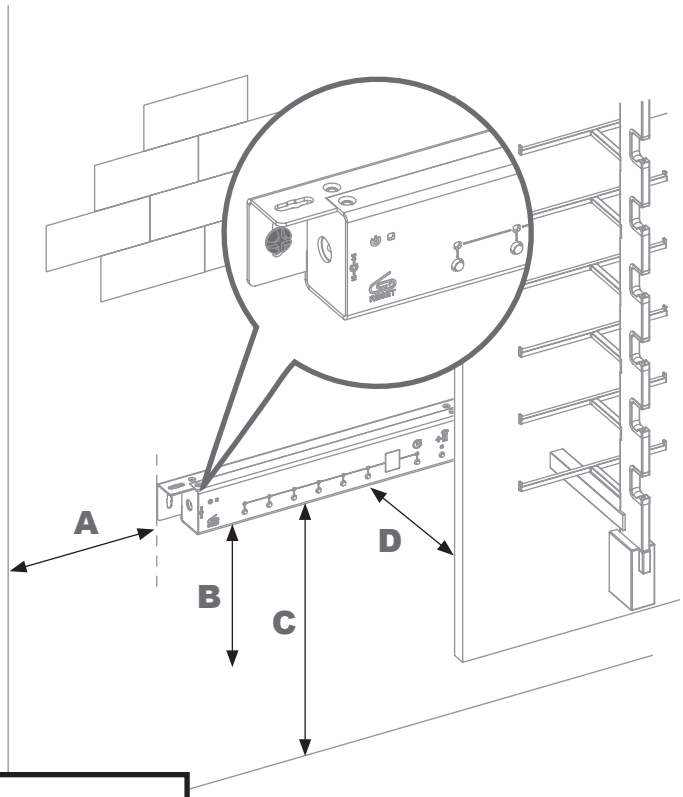

A Min. 120mm
B Min. 200mm
C Max. 1500mm from floor
D Min. 45mm

Option 3

VERTICAL - STRAIGHT

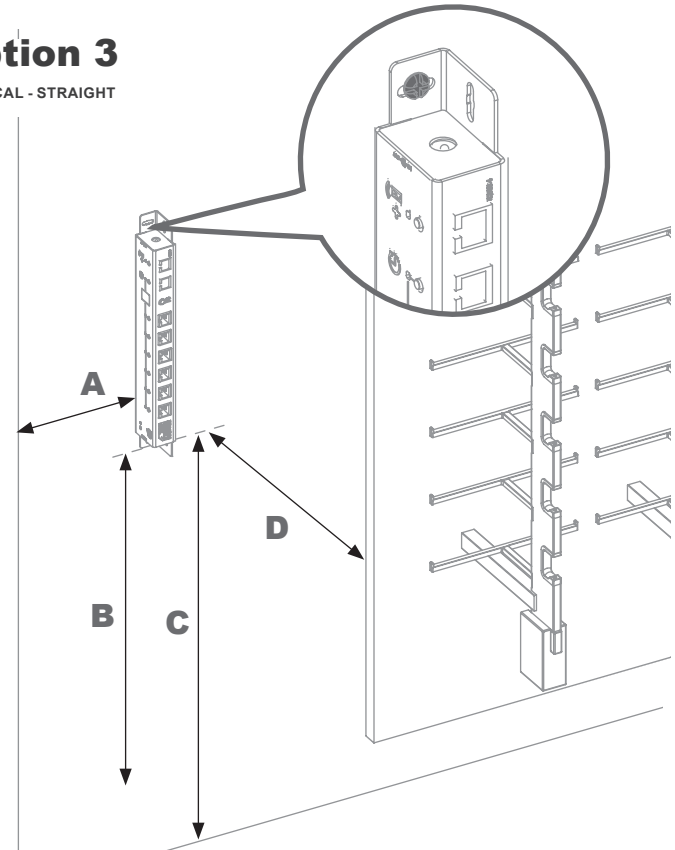

A Min. 40mm
B Min. 200mm
C Max. 1500mm from floor
D Min. 90mm

Option 4

VERTICAL - FLAT

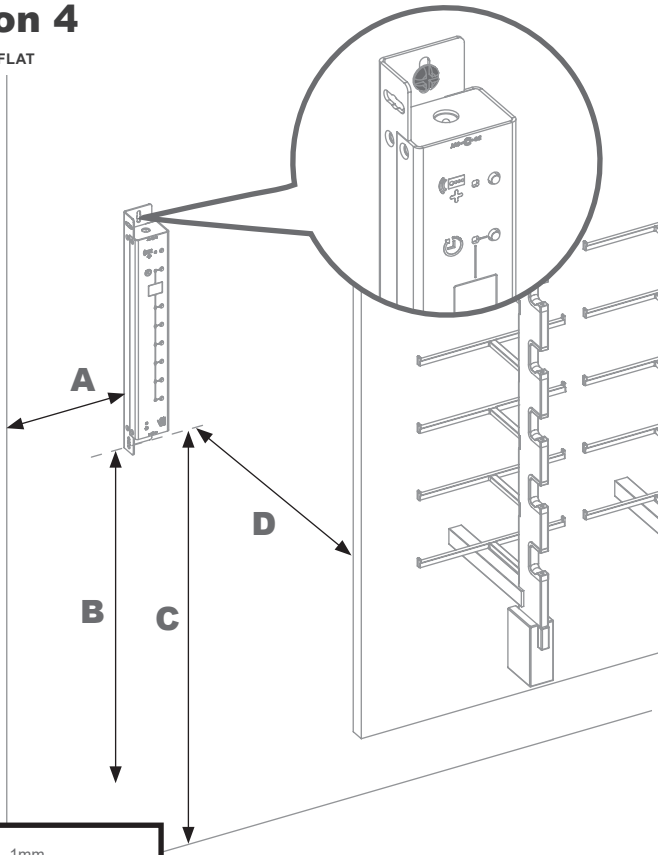

A Min. 1mm
B Min. 200mm
C Max. 1500mm from floor
D Min. 45mm

ASSEMBLING THE RECEIVER UNIT

1

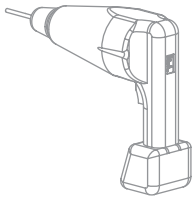

DRILL
ø2.5

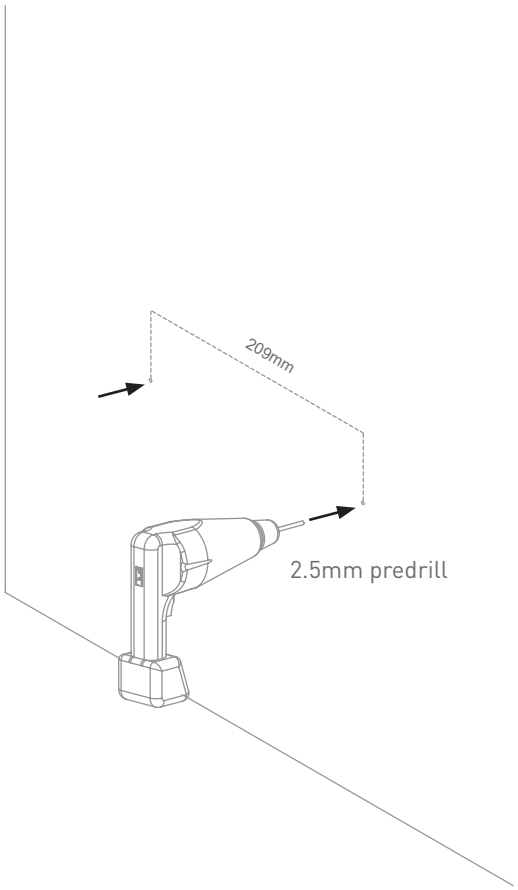

2

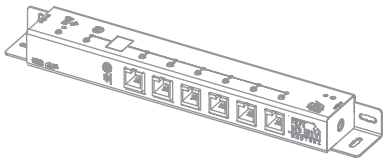

RECEIVER UNIT
50542
226x32x22mm
1x

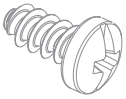

SCREW
95071
3.9x13mm
2x

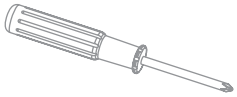

SCREWDRIVER
P1

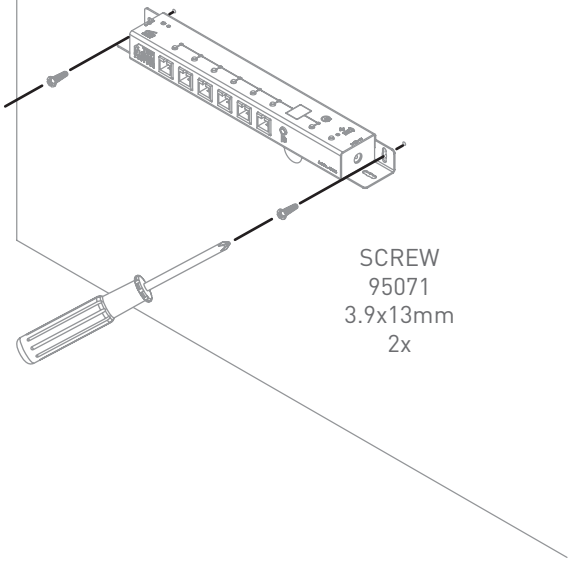

SCREW
95071
3.9x13mm
2x

ASSEMBLING THE RECEIVER EYE

3

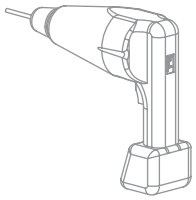

DRILL
ø16

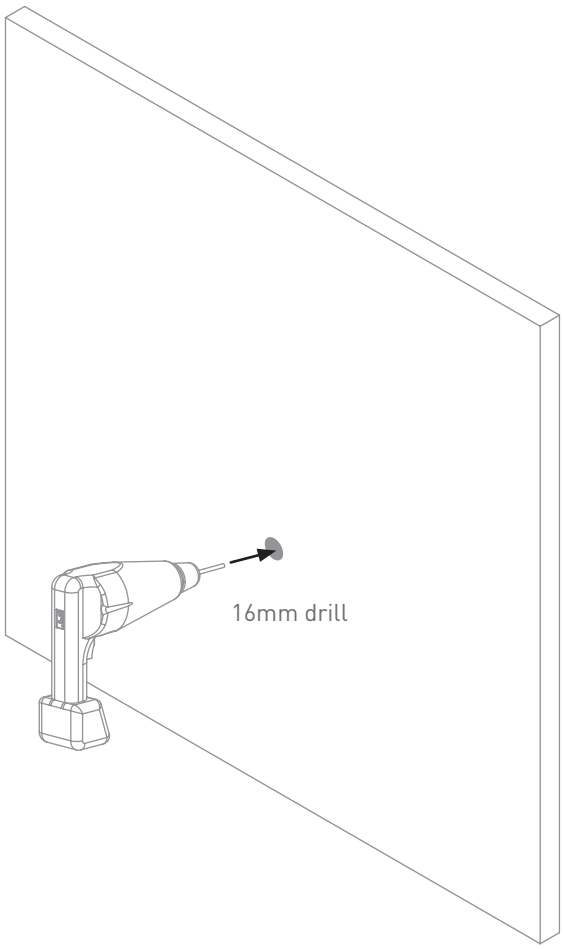

4

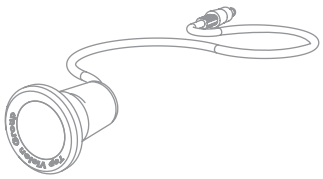

RECEIVER EYE
22476
1450xø16mm
1x

SPACER
95227
25x10mm
1x

#22

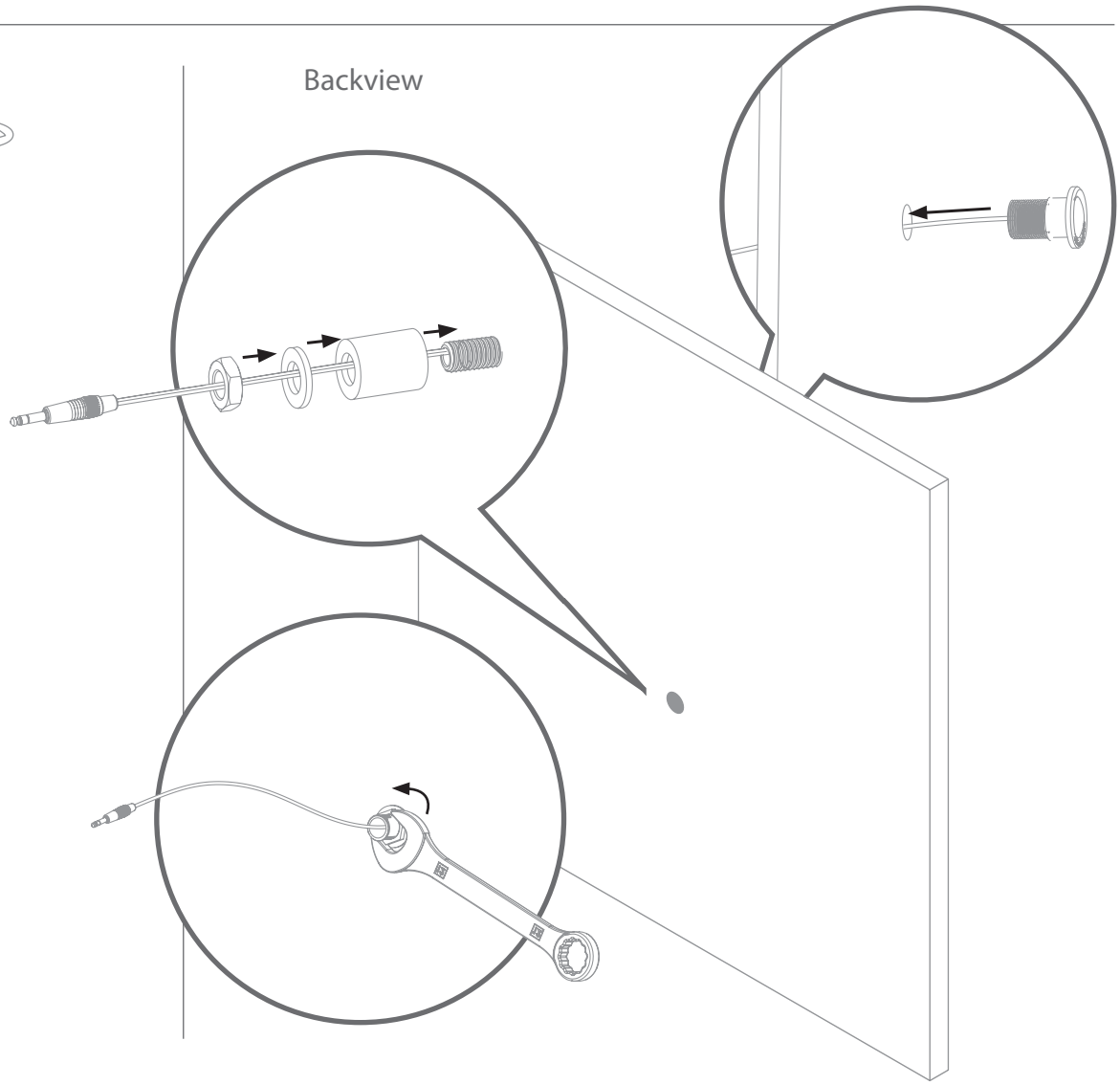

ASSEMBLING THE CABLES

5

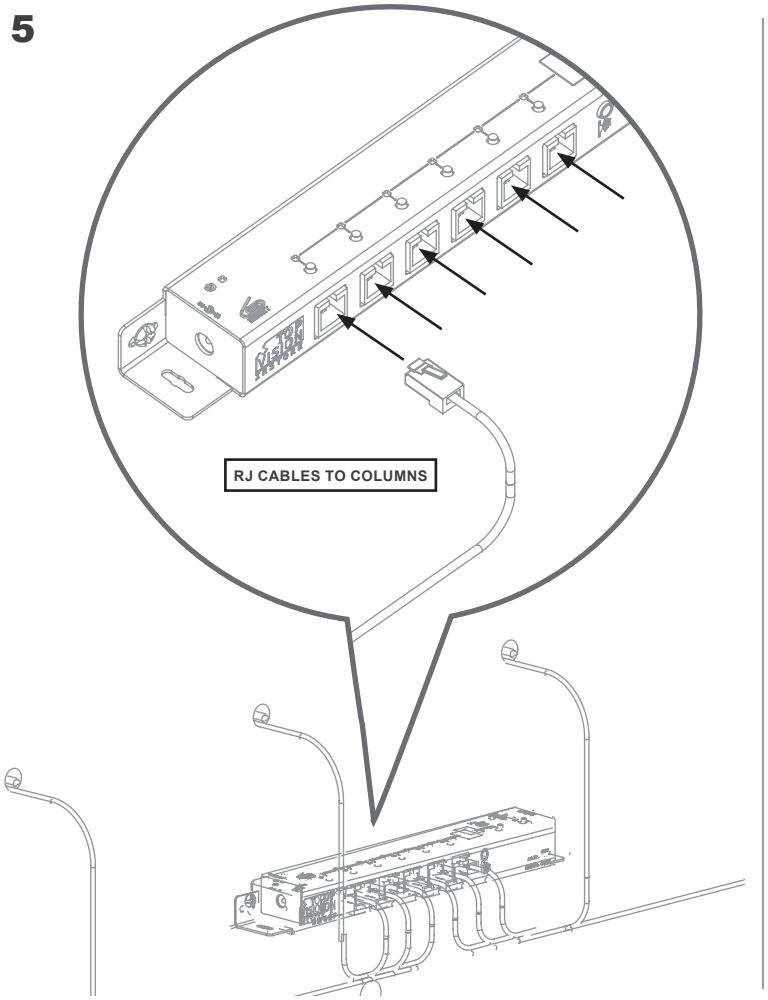

6

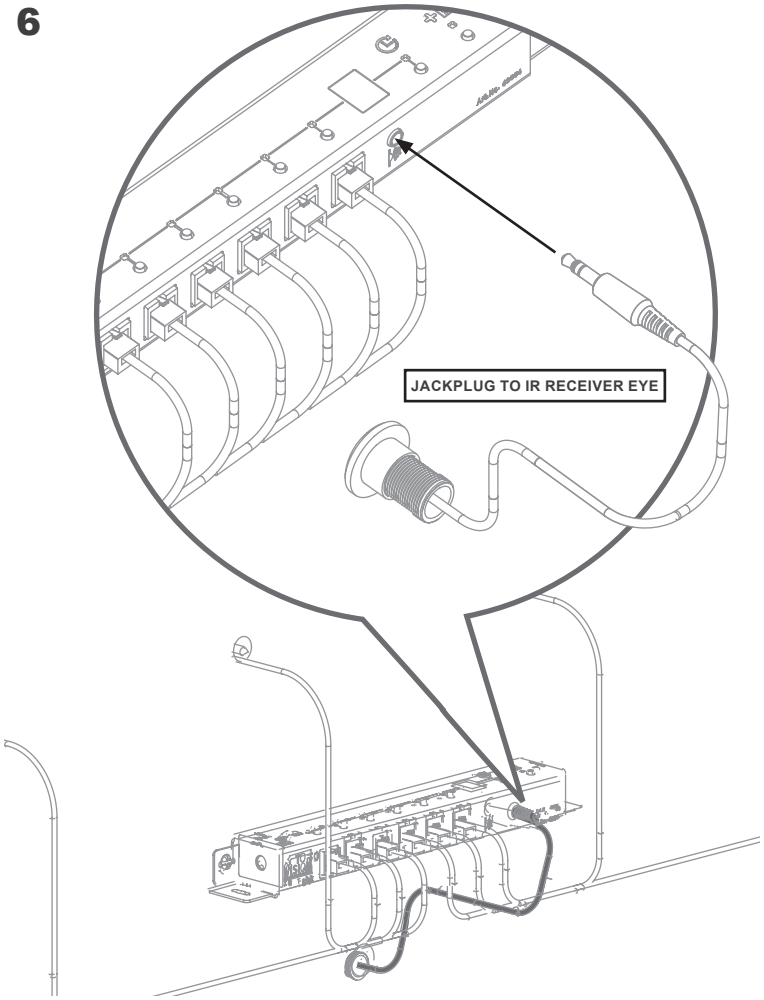

7

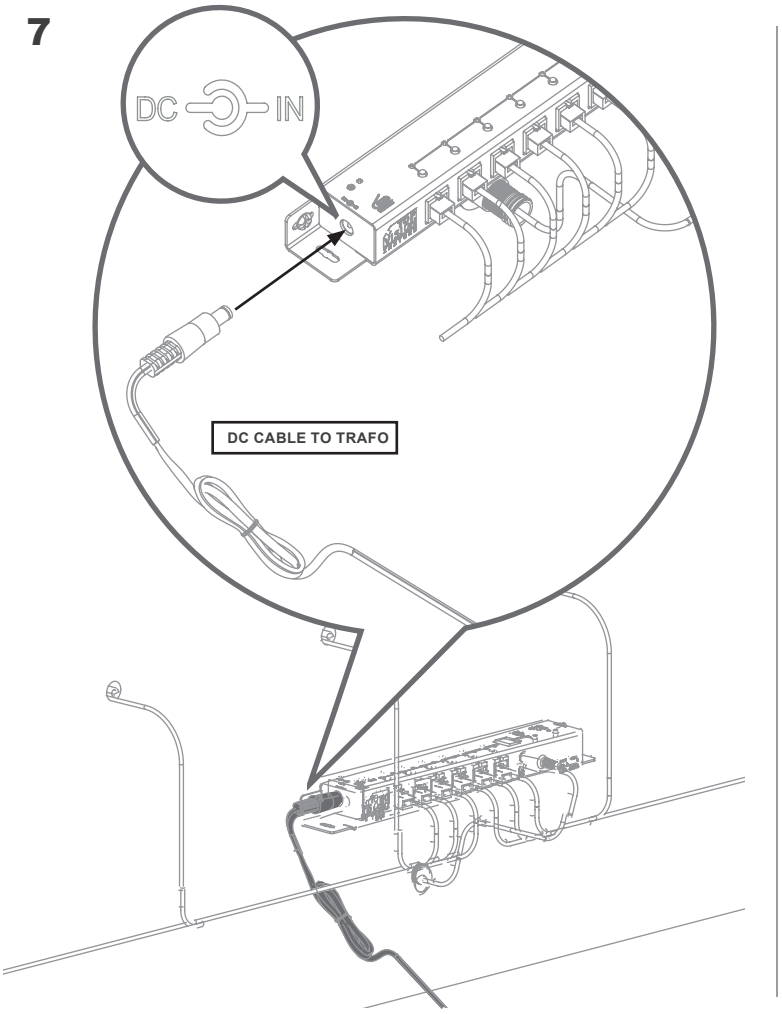

8

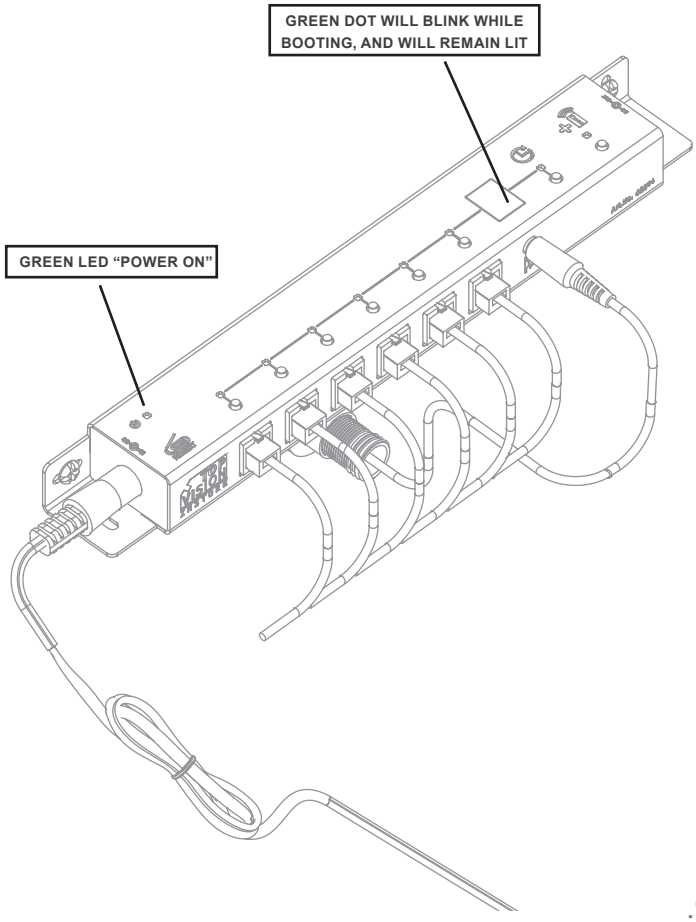

PROGRAMMING

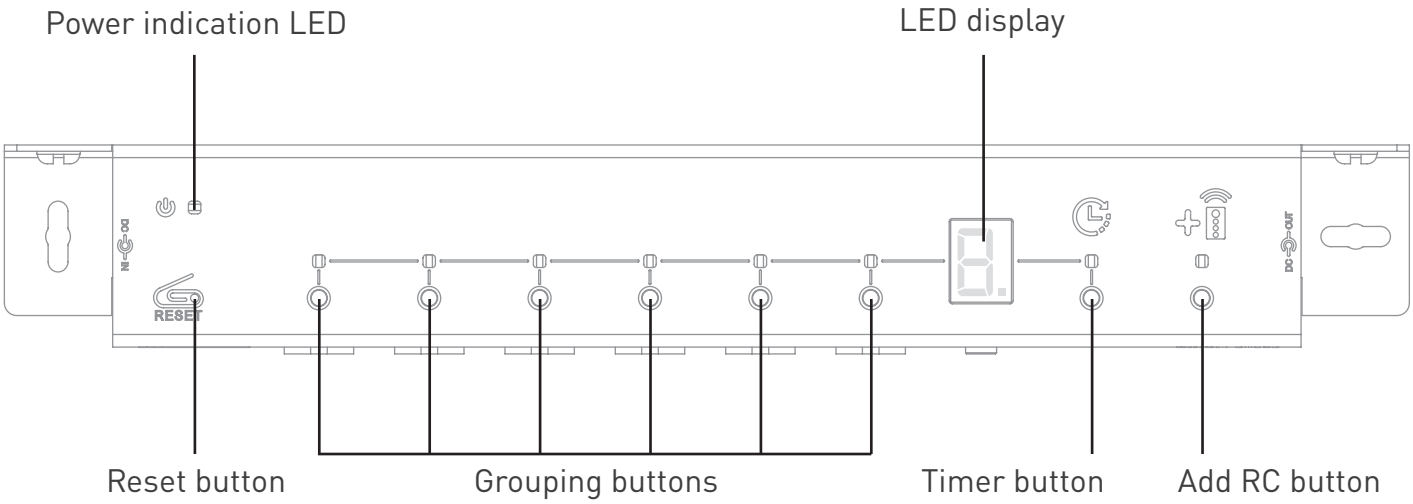

ADDING REMOTE CONTROL IR CODES

A
- Press the “Add RC button” until you hear a beep.
- The corresponding LED will lit up.
- The “LED display” will show an animation.
- As long as the animation is running, you can add IR codes.

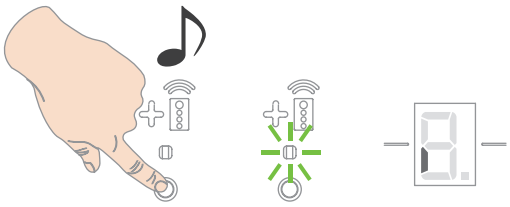

B
- Aim your remote control at the receiver eye and press the button of the remote control.
- A short melody will confirm if the new IR code was accepted.

Note! 2 low beeps will tell you that this IR code was already programmed.

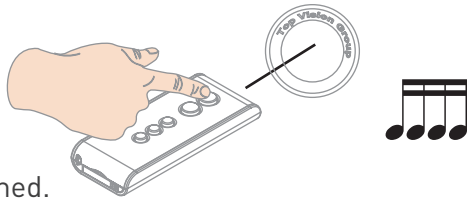

C
- Again, press the “Add RC button” to exit the programming mode.
- 3 short beeps will confirm exiting.

Note! If this last step is forgotten, the system will automatically exit the programming mode after 16 seconds, confirmed by 3 short beeps.

REMOVING ALL REMOTE CONTROL IR CODES

- Press the “Reset button” with a paperclip until you hear a beep.
- All known IR codes are now deleted.

Note! This action has no effect on the timer settings.
Your display will now no longer react to any remote control.
Add a new IR code by following the steps in the previous paragraph.

CREATING GROUPS OF COLUMNS

Each grouping button corresponces to one of the RJ port which is connected to an eyewear display column. You can set any column to a specific group (1 to 3), allowing it to only react on the corresponding 1-2-3 buttons of your remote control.

A
- Press one of the “Grouping buttons” until you hear a beep.
- The corresponding LED will lit up.
- The “LED display” will indicate to which group the eyewear display column currently belongs. 0 = no group settings, 1 = group 1 and so on.
- Keep pressing that group button until the “Led display” indicates the desired group number.

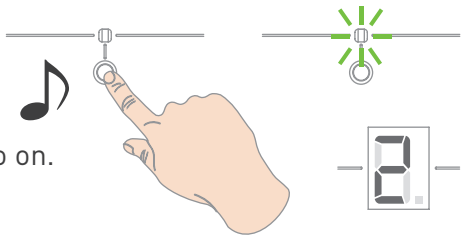

B
- As long as the LED is lit, you can switch between all group buttons, changing each group settings for each eyewear display column.
- To exit the programming mode, wait 8 seconds.
  The LED and LED display will automatically switch off.
- You can start regrouping any time you like by simply pressing one of the “Grouping buttons”.

Note! pressing the “Reset button” has no effect on group settings.
You can only change the group settings by using the “Grouping buttons”.

CHANGING THE TIMER INTERVAL FOR AUTOMATIC CLOSING

By setting the timer interval, your eyewear display column will close automatically after a set time period. (1 to 9 minutes)

- Press the “Timer button”.
- The corresponding LED will lit up.
- The “LED display” will indicate how many minutes the current interval is.
- Keep pressing the “Timer button until the “Led display” indicates the desired amount of minutes you want to have the eyewear display column to remain open before automatic closure.
  0 = No automatic closure.
  1 = Automatic closure after 1 minute.
  2= Automatic closure after 2 minutes.
  Etc.

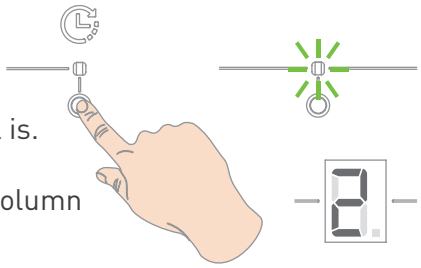

SYSTEM ERROR

When one of the LEDs above the “Grouping buttons” lits up in red, that corresponding RJ port is overloaded or malfunctioning.
Contact your local Top Vision dealer when this happens.

TOP | VISION
INSTORE

Head office - The Netherlands
Top Vision Group B.V.
Waarderweg 58
2031 BP Haarlem
The Netherlands

Tel: +31 23 517 66 77
Fax:+31 23 531 02 41
info@topvisiongroup.com
www.topvisiongroup.com

Concept & Design top vision studio **Photografie** tim stet **Text & translations** direct project, top vision group
© 2022 **top vision group** all rights reserverd. All specifications and prices are subject to change without notice. **Project** Manual-ALUMINA-Rotating-REM **Rev** 31-05-2022